Furnace Fixers

308A Roma Jean Pkwy.
Streamwood, IL 60107
P: (630) 736-0670
F: (630) 736-0680
www.furnacefixers.com

ENERGY SAVINGS UP TO 50%

OVEN FEATURES:

- AC VARIABLE SPEED CONTROL
- HEAVIER INSULATION
- DIGITAL TEMP. CONTROLLERS
- OVERTEMP. CONTROL
- ADJUSTABLE HEIGHT
- 1000 DEGREE CAPACITY
- HIGH SPEED FANS
- DYNAMIC PROPELLERS
- PORTABLE
- LOAD / UNLOAD CHUTES
- EXHAUST HOODS
- CLAMSHELL OVEN DESIGN FOR EASY CLEANING
- FAST PRODUCTION CYCLE TIME

KALAHARI

	OVERALL				HEATED			
	A	B	C		D	E	F	POWER
MODEL	LENGTH	WIDTH	HEIGHT	ft²	LENGTH	WIDTH	*W.H.	**KW
KAL-8	103-1/4"	26-5/8"	70-3/8"	20	78"	8"	4"	18.1
KAL-10	108-1/4"	28-5/8"	70-3/8"	21	83"	10"	4"	22.7
KAL-12	117-1/4"	30-5/8"	70-3/8"	25	92"	12"	4"	27.2
KAL-15	133-1/4"	33-5/8"	70-3/8"	33	108"	15"	4"	52.8

* DISTANCE FROM THE BELT TO THE TOP OF THE CONVEYOR (4" - 7")

** VALUE SUBJECT TO CHANGE

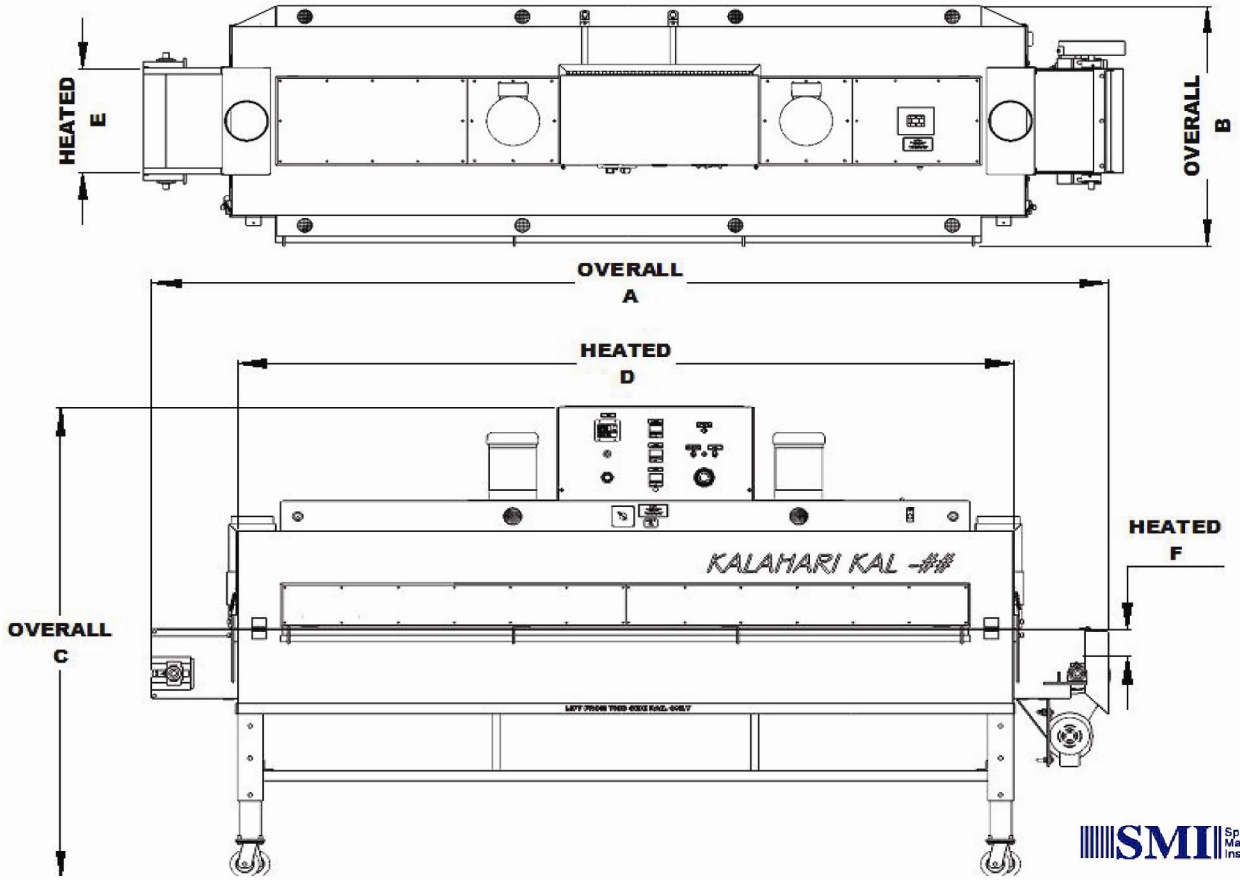

SMI Spring Manufacturers Institute

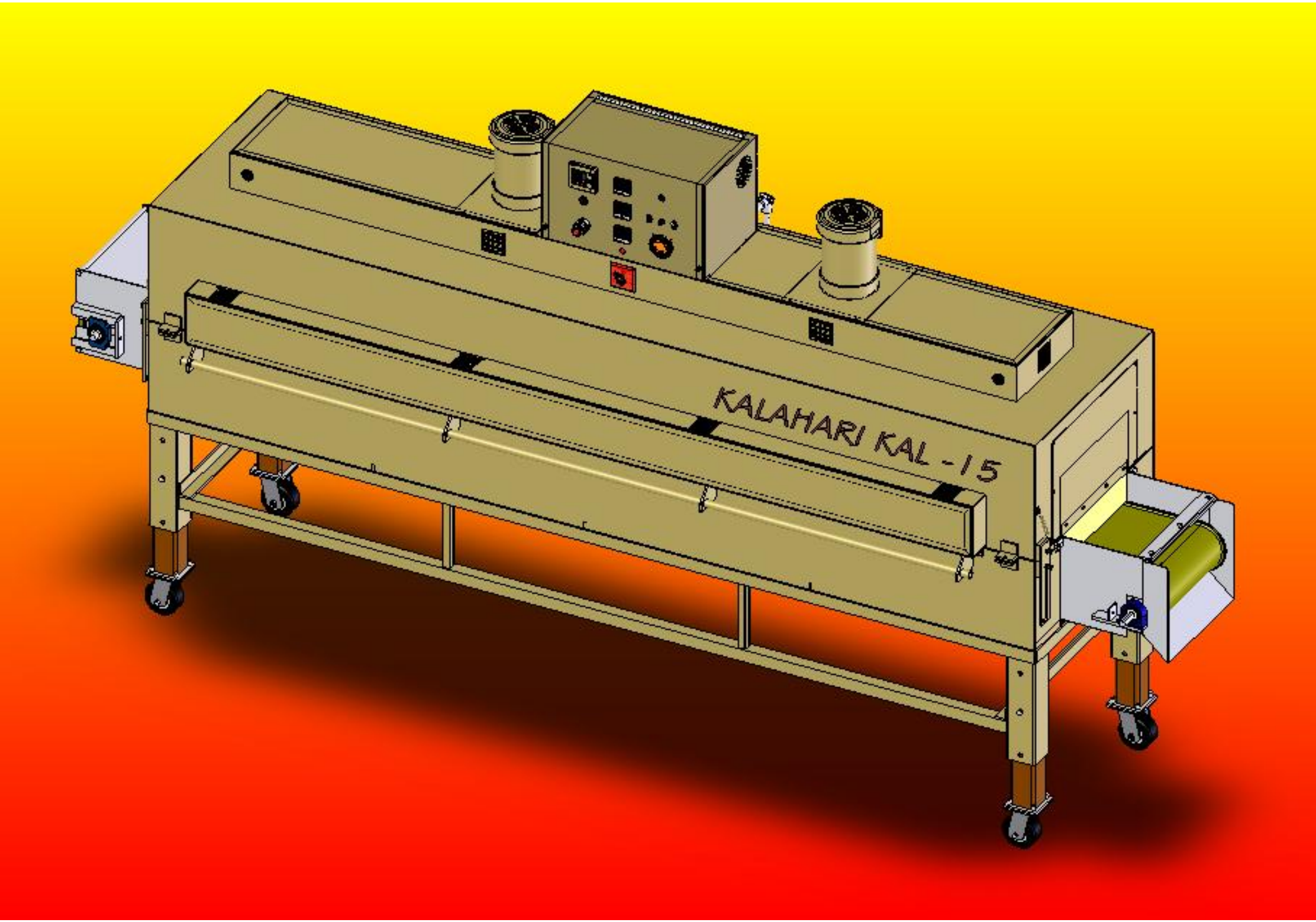
KALAHARI KAL - 15